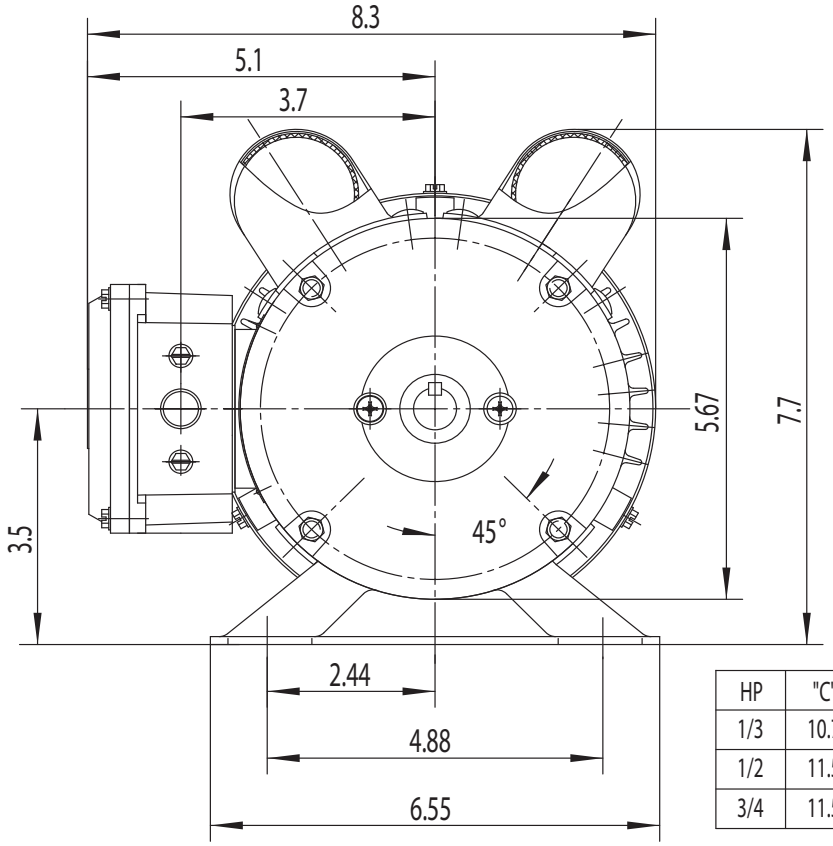


| HP | "C" | "AD" |
|---|---|---|
| 1/3 | 10.7 | 1.8 |
| 1/2 | 11.5 | 2.65 |
| 3/4 | 11.5 | 2.65 |

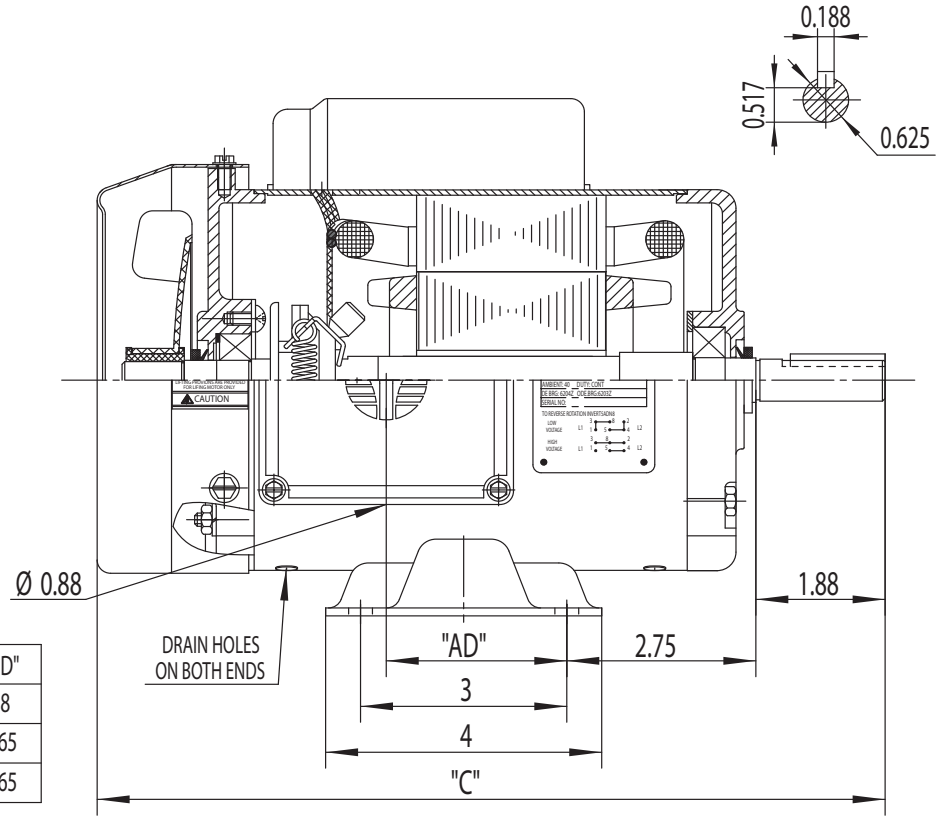


| | | | |
|---|---|---|---|
| TECHTOP® | | NEMA TEFC 56 | |
| Drawing Number: | RD1-RS-TF-56 | Issued Date: | 6/22/15 |
| Dimensions: | Inches | | |
| Mounting: | Rigid | TEFC - Red Line NEMA High Torque Farm Duty Series | |
| Casing Material: | Rolled Steel | | |